Index

Page	Schematics Page Name
01	Cover Sheet / Revision History
02	Top Level
03	Schematic
04	Miscellaneous

01_Revision_History.SchDoc

Revision History

Rev.	Rel.	Date	Author	Description	Page(s)
1.0.0	A	2022-01-20	EF	- Initial design	

RIC74424EVAL1

Default_Assembly

A

IR HiRel
An Infineon Technologies Company

IR HiRel Products

IRHIR PSS HiRel M

101 N Pacific Coast Highway El Segundo, CA 90245

04/2022

Link to Top Level Document

02 Top Level
02_Top_Level.SchDoc

LEGAL DISCLAIMER
THE INFORMATION GIVEN IN THIS DOCUMENT IS GIVEN FOR ILLUSTRATING PURPOSES ONLY. THE RECIPIENT OF THIS DOCUMENT MUST VERIFY ANY FUNCTION DESCRIBED HEREIN IN THE REAL APPLICATION. INFINEON TECHNOLOGIES HEREBY DISCLAIMS ANY AND ALL WARRANTIES AND LIABILITIES OF ANY KIND (INCLUDING WITHOUT LIMITATION WARRANTIES OF NON-INFRINGEMENT OF INTELLECTUAL PROPERTY RIGHTS OF ANY THIRD PARTY) WITH RESPECT TO ANY AND ALL INFORMATION GIVEN IN THIS DOCUMENT.

IR HiRel
An Infineon Technologies Company

IR HiRel Products
IRHIR PSS HiRel M
101 N Pacific Coast Highway El Segundo, CA 90245

Title	RIC74424EVAL1		
Variant	Default_Assembly	Approved	<Appr.>
Size: A3	Document Name: 01_Revision_History.SchDoc	Rel.: EF	Rev.: A
Author: Eric Faraci			
Date: 4/12/2022 Time: 8:42:57 AM	SVN Revision: Not in version control		
© Infineon Technologies AG 2022. All Rights Reserved.	Sheet of		

02_Top_Level.SchDoc

Schematic
03_Schematic.SchDoc

Miscellaneous
Miscellaneous.SchDoc

IR HiRel Products
IRHIR PSS HiRel M
An Infineon Technologies Company
101 N Pacific Coast Highway El Segundo, CA 90245

Title	RIC74424EVAL1		
Variant	Default_Assembly	Approved	<Appr.>
Size: A3	Document Name: 02_Top_Level.SchDoc	Rel.: EF	Rev.: A

Author: Eric Faraci
Date: 4/12/2022 Time: 8:42:58 AM SVN Revision: Not in version control

© Infineon Technologies AG 2022. All Rights Reserved.
Sheet of

03_Schematic.SchDoc

Power Stage A

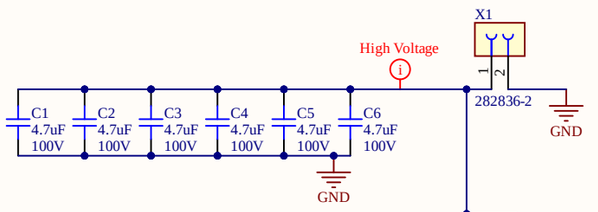

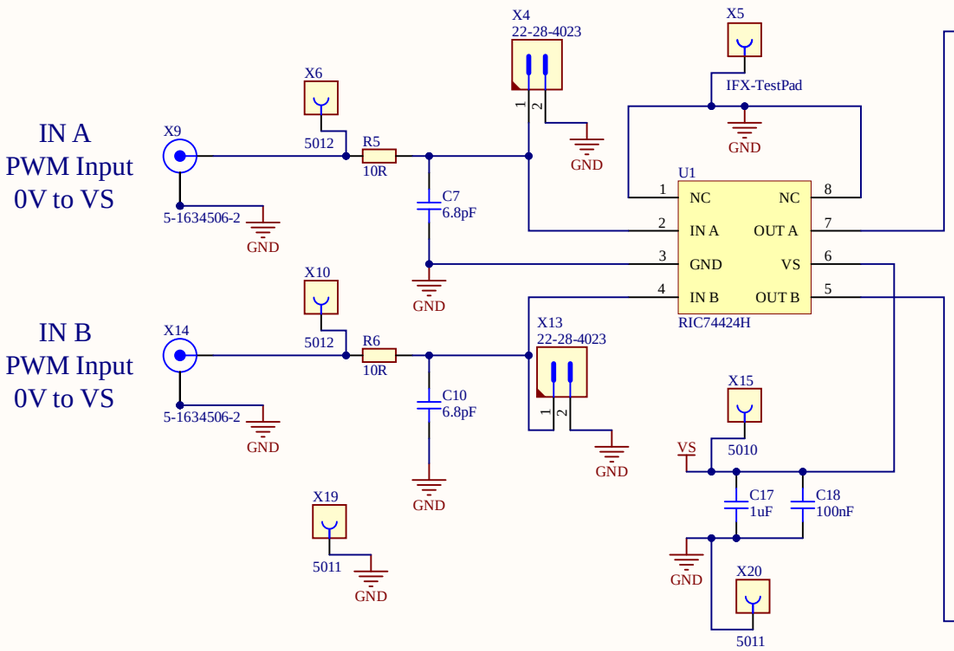

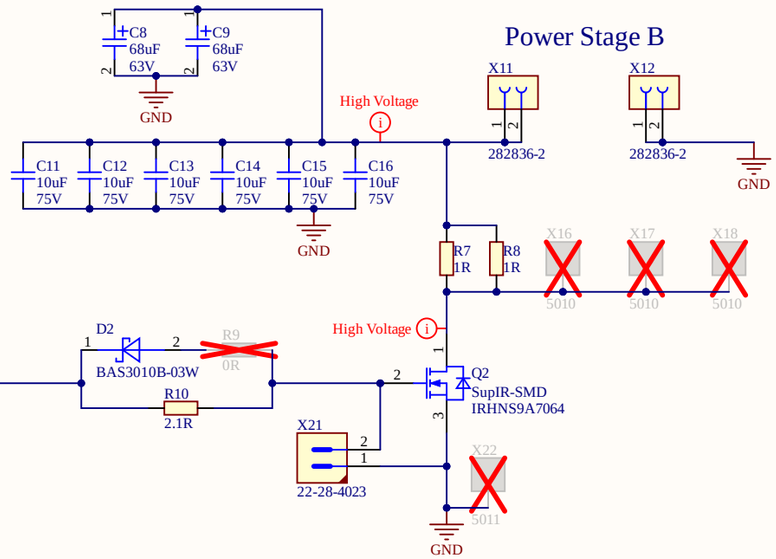

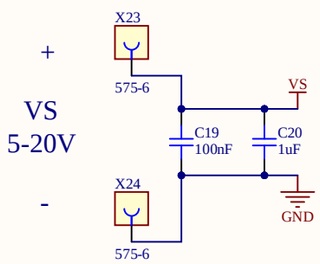

IR HiRel Products
IRHIR PSS HiRel M
An Infineon Technologies Company
101 N Pacific Coast Highway El Segundo, CA 90245

Title	RIC74424EVAL1		
Variant	Default_Assembly	Approved	<Appr.>
Size: A3	Document Name: 03_Schematic.SchDoc	Rel. EF	Rev. A
Author: Eric Faraci			
Date: 4/12/2022 Time: 8:42:58 AM	SVN Revision: Not in version control		
© Infineon Technologies AG 2022. All Rights Reserved.	Sheet of		

Miscellaneous.SchDoc

MP1



9434

MP2



9434

MP3



9434

MP4



9434

MP5



1903C

MP6



1903C

MP7



1903C

MP8



1903C

Fiducial Markers

E1



E2



E3



E4



E5



E6



IR HiRel Products
IRHIR PSS HiRel M
101 N Pacific Coast Highway El Segundo, CA 90245

Title	RIC74424EVAL1		
Variant	Default_Assembly	Approved	<Appr.>
Size: A3	Document Name: Miscellaneous.SchDoc	Rel.: EF	Rev.: A

Author: Eric Faraci
Date: 4/12/2022 Time: 8:42:58 AM SVN Revision: Not in version control
© Infineon Technologies AG 2022. All Rights Reserved. Sheet of

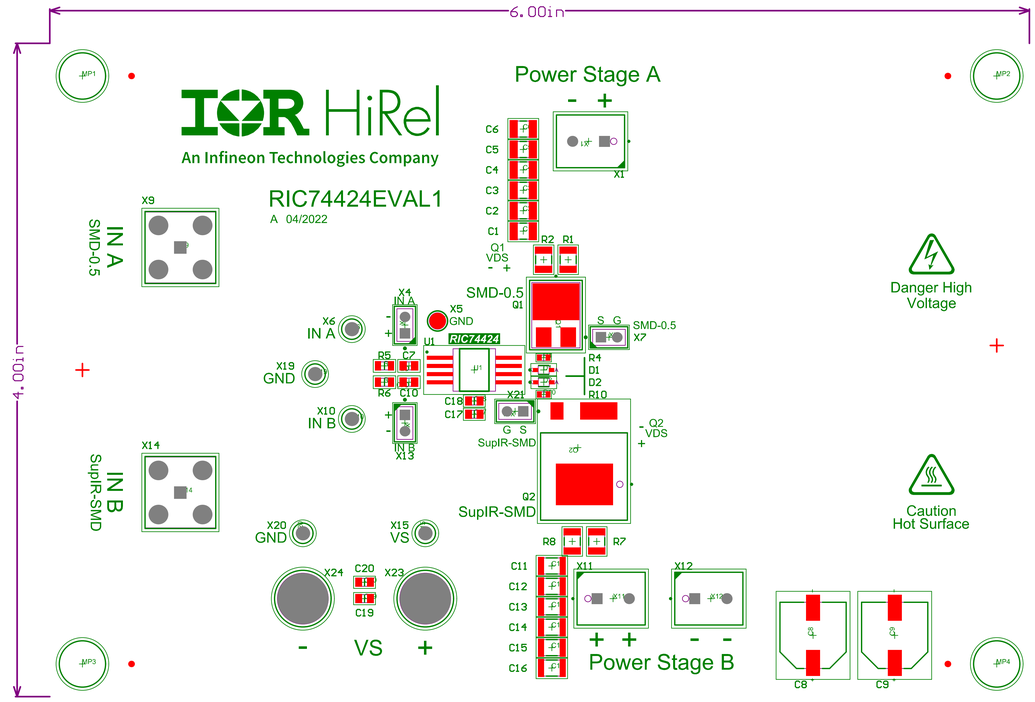

IOR HiRel
An Infineon Technologies Company

IRHIR PSS HiRel M
RIC74424EVAL1
Application Board
EASY 12345 A 04/2022

IOR HiRel
An Infineon Technologies Company

IOR HiRel An Infineon Technologies Company IR HiRel Products IRHIR PSS HiRel M 101 N Pacific Coast Highway El Segundo, CA 90245	ENGINEER:	TITLE: RIC74424EVAL1	
	PCB DESIGNER: Eric Faraci		
	DATE: 4/12/2022	PART NO.:	REL: <Rel.> / REV: A
	SVN REVISION: Not in version control	FILE NAME: PCB1.PcbDoc	APRV: <Appr.> / SCALE: 1:1

© Infineon Technologies AG 2022. All Rights Reserved.

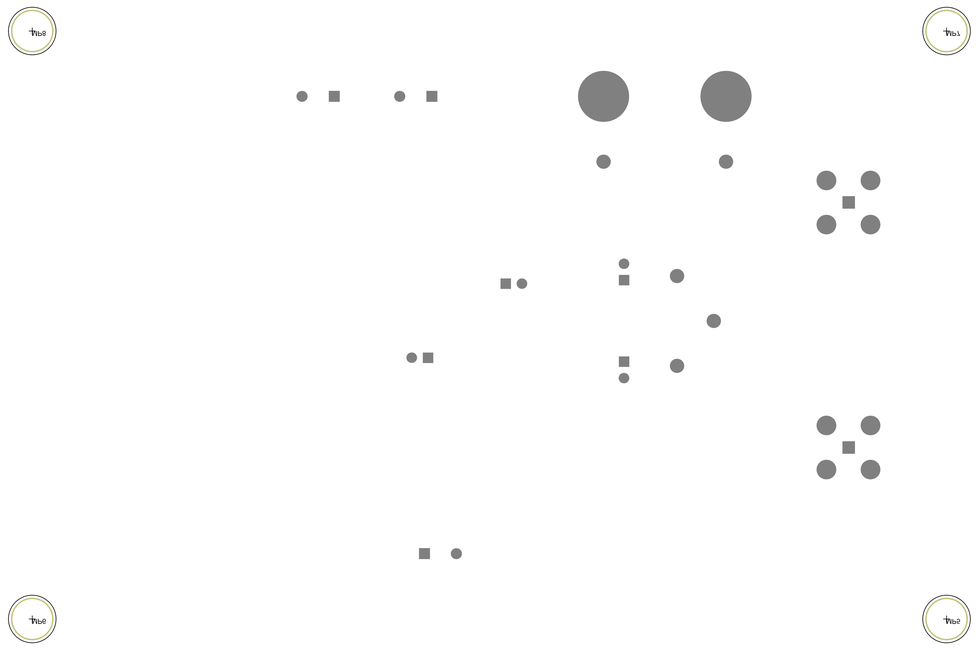

Layer	Name	Material	Thickness	Constant	Board Layer Stack
	Top Overlay				
	Top Solder	Solder Resist	0.40mil	3.5	
1	L1_Top		2.76mil		
	Core	FR-4	59.00mil	4.5	
2	L2_Bottom		2.76mil		
	Bottom Solder	Solder Resist	0.40mil	3.5	
	Bottom Overlay				

© Infineon Technologies AG 2022. All Rights Reserved.

IR HiRel Products
IRHIR PSS HiRel M
101 N Pacific Coast Highway
El Segundo, CA 90245

An Infineon Technologies Company

ENGINEER:	PCB DESIGNER: Eric Faraci	DATE: 4/12/2022	SVN REVISION: Not in version control
TITLE: RIC74424EVAL1		PART NO.:	FILE NAME: PCB1.PcbDoc
REV: A	REF: <Rel.>	APPV: <Appr.>	SCALE: 1:1